Industrial Motors

Commercial &
Appliance Motors

Automation

Digital &
Systems

Energy

Transmission &
Distribution

Coatings

W80 AXgen

Axial Flux Technology **European Market**



Driving efficiency and sustainability



Motors for

new

W80 AXgen

Axial Flux Technology

The **W80 AXgen** is a motor that enables OEM partners to push forward with their own new ideas. Compact in design, big in possibilities, this solution allows for downsizing, reducing logistical costs and helping to avoid CO_2 emissions across the entire production chain. **A solution designed to create opportunities for today's challenges and those that are yet to come.**

ideas



Driving efficiency and sustainability

Be part of the **new ideas** that will change the **industry tomorrow**

Electrical data

Frame	Speed range [rpm]		Torque [Nm]
	Lower	Higher	
160	1500	7500	32,5
180	1500	5800	130
200	1500	5200	265
225	1500	4700	460
250	1500	3700	637

Note: for speeds outside the indicated range, please contact WEG.

All designs are suitable for operation at:

- Constant torque range = 1000:1
- Constant power range = 1,3x nominal speed

IE5 - IEC SF 1,00						
Frame	Power [kW]	Speed [rpm]	Voltage [V]	Current [A]	Efficiency [%]	Mass [kg]
160	9,2	3000	400	15,6	93,7%	25,5
180	37	3000	400	63,9	95,8%	42,8
200	75	3000	400	128,3	96,4%	62,4
225	132	3000	400	218,1	97,1%	85,0
250	200	3000	400	343,1	97,2%	136,6
160	5,5	1500	400	9,4	93,4%	25,5
180	15	1500	400	28,3	95,1%	42,8
200	55	1500	400	94,6	96,5%	62,4
225	70	1500	400	115,9	96,8%	85,0
250	90	1500	400	161,6	96,9%	136,6

Mechanical data

IEC	External				Flange				Shaft				Cooling	Terminal box					Bearings	
Frames	AC	AD	HD	L	N	M	T	S	D	E	ES	F	G	S1	S2	S3	LL	LM	D.E.	N.D.E.
160	304	210	345	171	254	228,6	5	3/8	19	40	28	6	1/2	M16	M12	M6	119	119	7206	7206
180	361	236	396	200	304,8	279,4	5	3/8	24	60	36	8	1/2	M20	M16	M6	119	119	7208	7208
200	393	257	433	245	336,6	311,2	5	3/8	38	80	45	10	5/8	M25	M20	M8	157	157	7209	7209
225	443	279	478	263	381	355,6	6	1/2	38	80	63	10	3/4	M25	M20	M8	157	157	7210	7210
250	542	340	584	303	469,9	431,8	6	5/8	42	110	80	12	3/4	M32	M25	M10	180	180	7212	7212

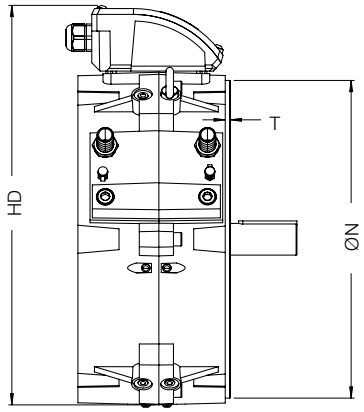

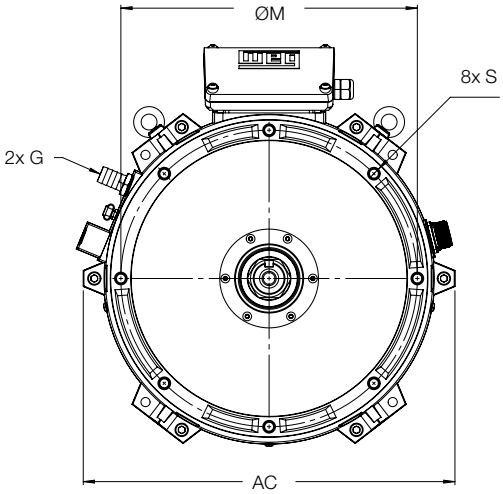

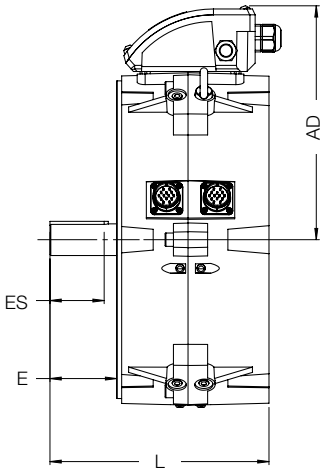

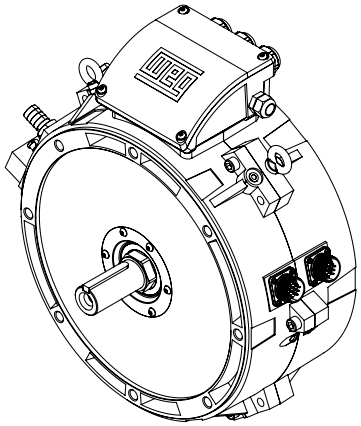

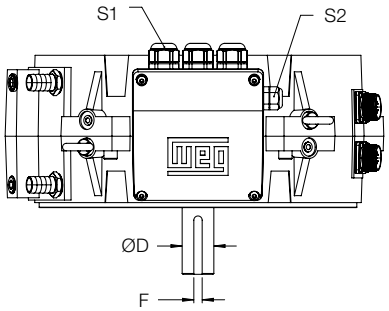

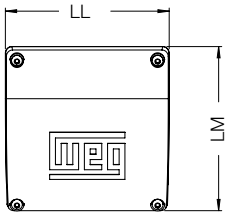

Cooling system

- Fluid: water (fresh, deionized...) and oil (ISO VG up to 46).
- Flow rate: from 5 to 15 l/min.
- Inlet pressure: up to 10 bar.

The W80 AXgen is recommended for OEMs.



Compact

de

Motors for
new ideas.

W80 AXgen

Axial Flux Technology

Welcome to a compact way of thinking big. The **W80 AXgen** is designed to enable OEM partners to explore new ideas for their products. Developed by WEG, this solution offers ease of application and a high degree of scalability, creating opportunities for today's challenges and those that are yet to come.

sign



Driving efficiency and sustainability

The scope of WEG Group solutions
is not limited to products and solutions
presented in this catalogue.
To see our portfolio, contact us.

For WEG's worldwide
operations visit our website

www.weg.net

+55 47 3276.4000
motores@weg.net
Jaraguá do Sul - SC - Brazil

Cod: 50143609 | Rev: 00 | Date (m/y): 10/2024.
The values shown are subject to change without prior notice.
The information contained is reference values.